Subminiature Fuse, 8.5 mm, Time-Lag T, Telecom, 250 VAC, 63 VDC

IEC 60127-3 · 250 VAC · Time-Lag T

See below:
Approvals and Compliances

Applications
- xDSL and ADSL linecards and modems

References
Packaging Details
Corresponding Fuseholder
Last order date: 31.12.2016
We recommend for new applications the type MST 250
MST 250 is fully compatible to MSU 250

Weblinks
pdf data sheet, html datasheet, General Product Information, Packaging details, Distributor-Stock-Check, Detailed request for product

Technical Data

Rated Voltage	250 VAC, 63 VDC
Rated current	0.25 - 3.15 A
Breaking Capacity	35 A - 50 A
Characteristic	Time-Lag T
Mounting	PCB,THT
Admissible Ambient Air Temp.	-40 °C to 85 °C
Climatic Category	40/085/21 acc. to IEC 60068-1
Material: Housing	Thermoplastic, UL 94V-0
Material: Terminals	Tin-Plated Copper
Unit Weight	0.53 g
Storage Conditions	0 °C to 40 °C, max. 70% r.h.
Product Marking	S, Type, Rated current, Rated Voltage, Characteristic, Certification marks

Soldering Methods	Wave Soldering Profile
Solderability	235 °C / 2 sec acc. to IEC 60068-2-20, Test Ta
Resistance to Soldering Heat	260 °C / 10 sec acc. to IEC 60068-2-20, Test Tb
Case Resistance	acc. to EIA/IS-722, Test 4.7 >100 MΩ (between leeds and body)
Flammability	UL 94V-0 (acc. to EIA/IS-722, Test 4.12)
Current Carrying Capacity	acc. to EIA/IS-722, Test 4.3.3
Moisture Resistance Test	(acc. to EIA/IS-722, Test 4.4.3)
Vibration, High Frequency	MIL-STD-202, Method 204 Condition D
Mechanical Shock	(acc. to EIA/IS-722, Test 4.9)
Resistance to Solvents	MIL-STD-202, Method 215
Terminal Strength	Tensile load min. 9 N (acc. to EIA/IS-722, Test 4.5.1)

Approvals and Compliances

Detailed information on product approvals, code requirements, usage instructions and detailed test conditions can be looked up in Details about Approvals

SCHURTER products are designed for use in industrial environments. They have approvals from independent testing bodies according to national and international standards. Products with specific characteristics and requirements such as required in the automotive sector according to IATF 16949, medical technology according to ISO 13485 or in the aerospace industry can be offered exclusively with customer-specific, individual agreements by SCHURTER.

Approvals

The approval mark is used by the testing authorities to certify compliance with the safety requirements placed on electronic products.
Approval Reference Type: MSU 250

Approval Logo	Certificates	Certification Body	Description
	VDE Approvals	VDE	VDE Certificate Number: 40013529
	UL Approvals	UL	UL File Number: E41599
	CCC Approvals	CCC	CCC Certificate Number: 2003010207100519

Product standards

Product standards that are referenced

Organization	Design	Standard	Description
	Designed according to	UL 248-14	Low voltage fuses - Part 14: Additional fuses
	Designed according to	CSA22.2 No. 248.14	Low-Voltage Fuses - Part 14: Supplemental Fuses

Application standards

Application standards where the product can be used

Organization	Design	Standard	Description
	Designed for applications acc.	IEC/UL 60950	IEC 60950-1 includes the basic requirements for the safety of information technology equipment.

Compliances

The product complies with following Guide Lines

Identification	Details	Initiator	Description
	CE declaration of conformity	SCHURTER AG	The CE marking declares that the product complies with the applicable requirements laid down in the harmonisation of Community legislation on its affixing in accordance with EU Regulation 765/2008.
	RoHS	SCHURTER AG	Directive RoHS 2011/65/EU, Amendment (EU) 2015/836
	China RoHS	SCHURTER AG	The law SJ / T 11363-2006 (China RoHS) has been in force since 1 March 2007. It is similar to the EU directive RoHS.
	REACH	SCHURTER AG	On 1 June 2007, Regulation (EC) No 1907/2006 on the Registration, Evaluation, Authorization and Restriction of Chemicals 1 (abbreviated as "REACH") entered into force.

Dimension [mm]

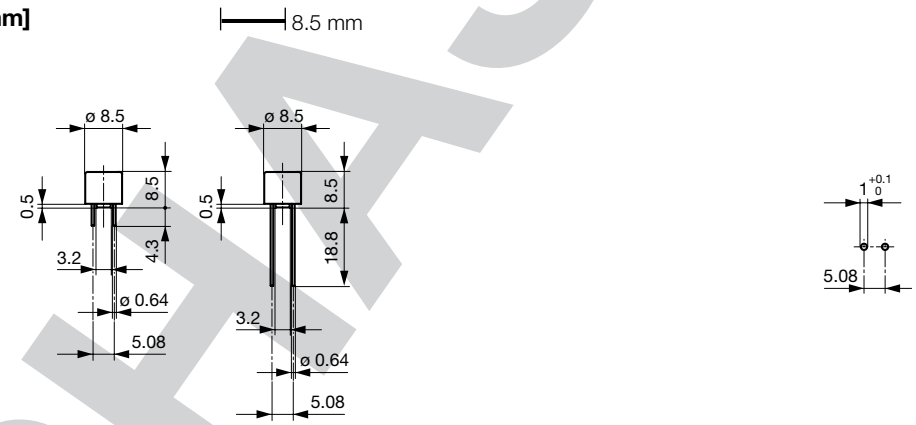

Drilling diagram

Pre-Arcing Time

Rated Current In	1.5 x In min.	2.1 x In max.	2.75 x In min.	2.75 x In max.	4.0 x In min.	4.0 x In max.	10.0 x In min.	10.0 x In max.
0.25 A - 3.15 A	60 min	120 s	400 ms	10 s	150 ms	3 s	20 ms	150 ms

Time-Current-Curves

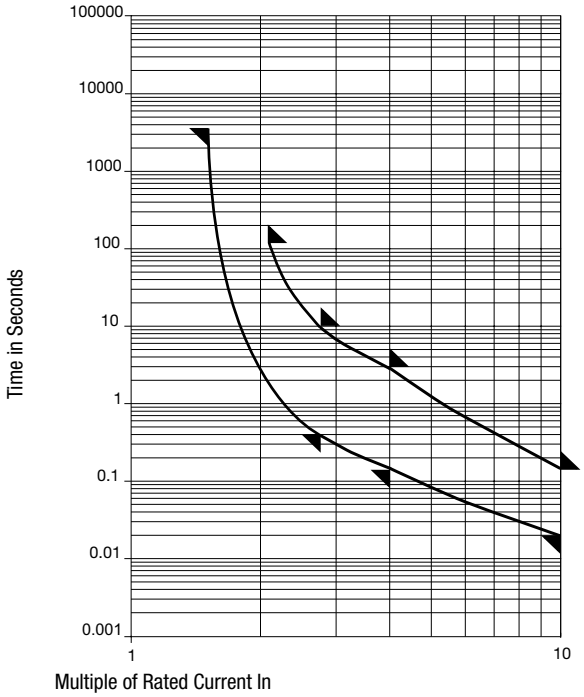

All Variants

Rated Current [A]	Rated Voltage [VAC]	Voltage Drop 1.0 I_n typ. [mV]	Power Dissipation 1.5 I_n typ. [mW]	Melting I^2t 10.0 I_n typ. [A^2s]	GR-1089-CORE [A]	UL60950	ITU - Lightning Surge[A]	ITU - Power Induc-	ITU - Power Contact[A]	S	L	T	Order Number
0.25	250	120	80	0.6	> 14.0		25.3	●	35.0	●			2040.0609
0.315	250	120	100	0.8	> 14.0		29.2	●	35.0	●			2040.0610
0.4	250	110	100	1.1	> 14.0		39.5	●	35.0	●			2040.0611
0.5	250	100	100	2.5	> 14.0		57	●	35.0	●			2040.0612
0.63	250	90	100	4	> 14.0		67	●	35.0	●			2040.0613
0.8	250	80	200	8	> 14.0	●	67	●	35.0	●			2040.0614
1	250	70	200	12	> 14.0	●	67	●	35.0	●			2040.0615
1.25	250	70	300	15	> 14.0	●	67	●	35.0	●			2040.0616
1.6	250	60	300	30	> 14.0	●	67	●	50.0	●			2040.0617
2	250	60	300	34	> 14.0	●	67	●	50.0	●			2040.0618
2.5	250	50	400	55	> 14.0	●	67	●	50.0	●			2040.0619
3.15	250	50	500	76	> 14.0	●	67	●	50.0	●			2040.0620
0.25	250	120	80	0.6	> 14.0		25.3	●	35.0		●		2040.0709
0.315	250	120	100	0.8	> 14.0		29.2	●	35.0		●		2040.0710
0.4	250	110	100	1.1	> 14.0		39.5	●	35.0		●		2040.0711
0.5	250	100	100	2.5	> 14.0		57	●	35.0		●		2040.0712
0.63	250	90	100	4	> 14.0		67	●	35.0		●		2040.0713
0.8	250	80	200	8	> 14.0	●	67	●	35.0		●		2040.0714
1	250	70	200	12	> 14.0	●	67	●	35.0		●		2040.0715
1.25	250	70	300	15	> 14.0	●	67	●	35.0		●		2040.0716
1.6	250	60	300	30	> 14.0	●	67	●	50.0		●		2040.0717
2	250	60	300	34	> 14.0	●	67	●	50.0		●		2040.0718
2.5	250	50	400	55	> 14.0	●	67	●	50.0		●		2040.0719
3.15	250	50	500	76	> 14.0	●	67	●	50.0		●		2040.0720
0.25	250	120	80	0.6	> 14.0		25.3	●	35.0			●	2040.0809
0.315	250	120	100	0.8	> 14.0		29.2	●	35.0			●	2040.0810
0.4	250	110	100	1.1	> 14.0		39.5	●	35.0			●	2040.0811

Rated Current [A]	Rated Voltage [VAC]	Voltage Drop 1.0 I_n typ. [mV]	Power Dissipation 1.5 I_n typ. [mW]	Melting I^2t 10.0 I_n typ. [A^2s]	GR-1089-CORE [A]	UL60950	ITU - Lightning Surge[A]	ITU - Power Induc-	ITU - Power Contact[A]	S	L	T	Order Number
0.5	250	100	100	2.5	> 14.0		57	●	35.0			●	2040.0812
0.63	250	90	100	4	> 14.0		67	●	35.0			●	2040.0813
0.8	250	80	200	8	> 14.0	●	67	●	35.0			●	2040.0814
1	250	70	200	12	> 14.0	●	67	●	35.0			●	2040.0815
1.25	250	70	300	15	> 14.0	●	67	●	35.0			●	2040.0816
1.6	250	60	300	30	> 14.0	●	67	●	50.0			●	2040.0817
2	250	60	300	34	> 14.0	●	67	●	50.0			●	2040.0818
2.5	250	50	400	55	> 14.0	●	67	●	50.0			●	2040.0819
3.15	250	50	500	76	> 14.0	●	67	●	50.0			●	2040.0820

Availability for all products can be searched real-time:https://www.schurter.com/en/Stock-Check/Stock-Check-SCHURTER

IEC: 35 A @ 250 VAC

UL: 35 A @ 250 VAC / 50 A @ 63 VDC

Packaging Unit

S = Plastic Bag (100 pcs.)
L = Bulk (100 pcs.)
T = Taped 36 cm Reel (750 pcs.)